TECAPRES®

Ø95mm
4200daN

MICRO 95CF

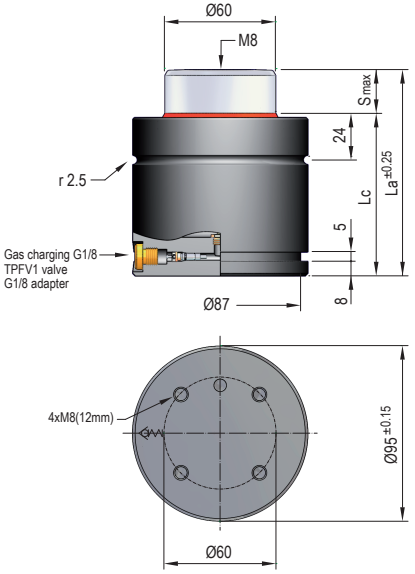

Pressure medium	Gas Nitrógeno (N_2)
Max. charging pressure	150 Bar
Min. charging pressure	35 Bar
Rod seal area	28,27 cm²
Operating temperature	0ºC - 80ºC
Force increase by temperature	0,33 %/ºC
Max. stem speed	1,6 m/s
Maintenance kit	Kit M95CF

PED 2014/68/UE

VDI SAFETY

RE-60-80

Maximum strokes / minute (at 20°C)

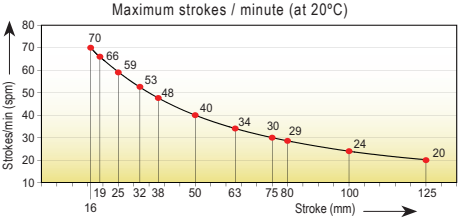

Code	Smax mm	La mm	Lc mm	Fa daN	90% F daN	100% Fc daN	P Bar	V l	Kg
MICRO 95CFx16	16	94	78	4200 ±5% (20ºC)	5890	6155	150 (20ºC)	0,146	2,80
MICRO 95CFx19	19	100	81		6000	6285		0,165	2,90
MICRO 95CFx25	25	112	87		6160	6485		0,204	3,10
MICRO 95CFx32	32	126	94		6285	6645		0,250	3,25
MICRO 95CFx38	38	138	100		6370	6745		0,290	3,70
MICRO 95CFx50	50	162	112		6480	6885		0,368	3,90
MICRO 95CFx63	63	188	125		6565	6990		0,453	4,40
MICRO 95CFx75	75	212	137		6615	7055		0,532	4,75
MICRO 95CFx80	80	222	142		6635	7075		0,565	4,90
MICRO 95CFx100	100	262	162		6690	7145		0,695	6,00
MICRO 95CFx125	125	312	187		6735	7205		0,859	6,50

Force/stroke ratio

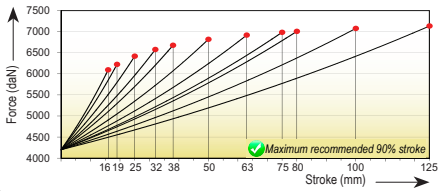

Initial force/charging pressure ratio

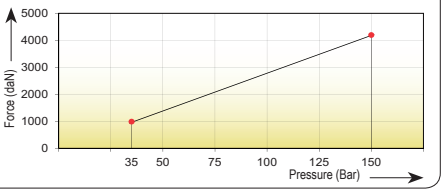

Assembly possibilities

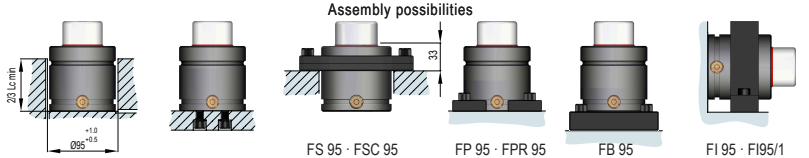

FS 95 · FSC 95 | FP 95 · FPR 95 | FB 95 | FI 95 · FI95/1